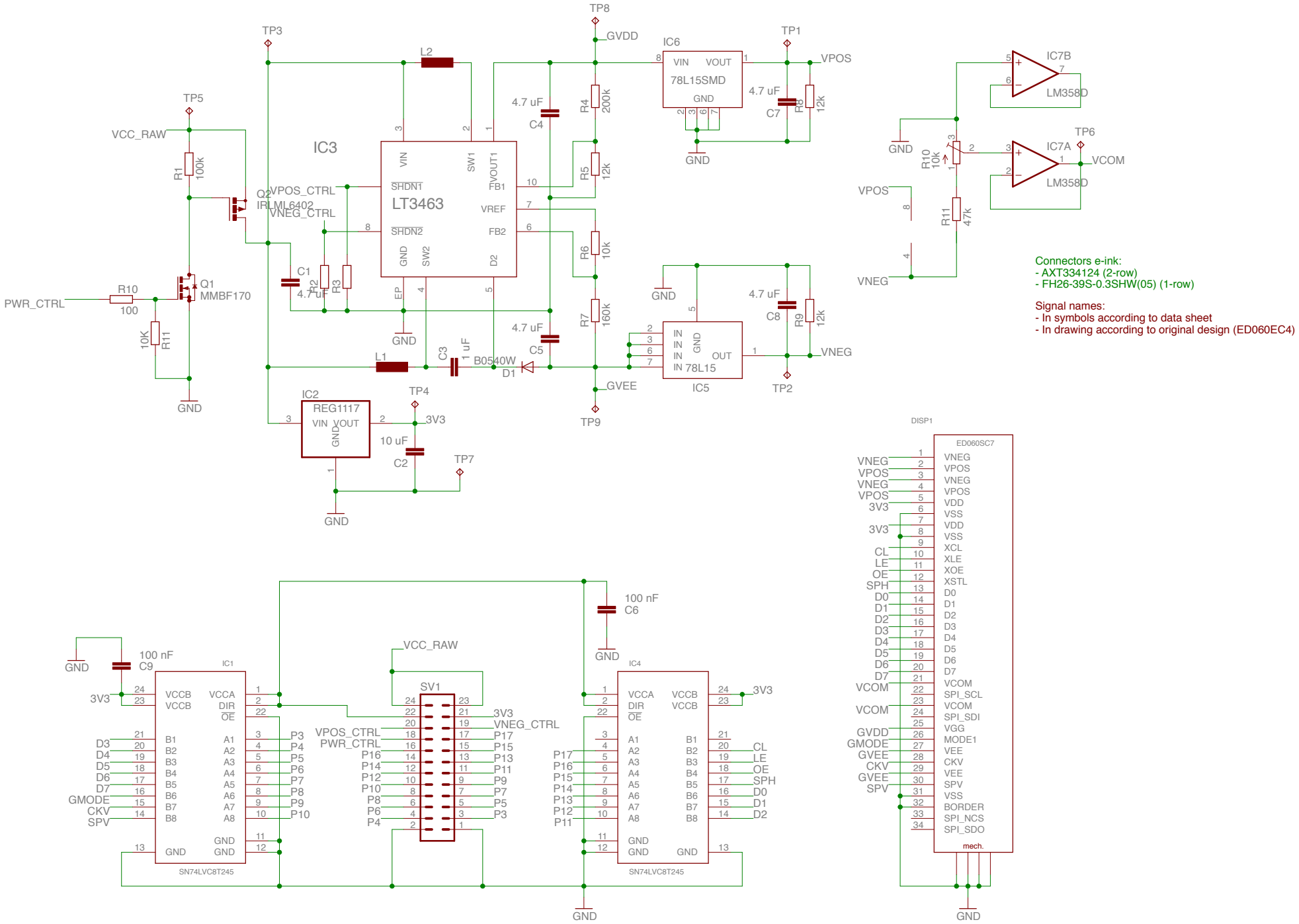
TP3
TP5
VCC_RAW
R1
100k
Q2
IRLML6402
VPOS_CTRL
VNEG_CTRL
IC3
LT3463
VIN
SW1
VOUT1
SHDN1
FB1
VREF
SHDN2
FB2
GND
SW2
D2
EP
L2
C1
4.7 uF
R2
R3
GND
L1
C3
1 uF
B0540W
D1
C5
4.7 uF
R10
100
PWR_CTRL
Q1
MMBF170
10K
R11
GND
IC2
REG1117
VIN
VOUT
GND
3V3
TP4
10 uF
C2
TP7
GND
TP8
GVDD
4.7 uF
C4
R4
200k
R5
12k
R6
10k
R7
160k
GVEE
TP9
IC6
78L15SMD
VIN
VOUT
GND
TP1
VPOS
4.7 uF
C7
R8
12k
GND
IC5
78L15
IN
IN
IN
IN
GND
OUT
4.7 uF
C8
R9
12k
VNEG
TP2
IC7B
LM358D
IC7A
LM358D
TP6
VCOM
GND
R10
10k
R11
47k
VPOS
VNEG
Connectors e-ink:
- AXT334124 (2-row)
- FH26-39S-0.3SHW(05) (1-row)
Signal names:
- In symbols according to data sheet
- In drawing according to original design (ED060EC4)
100 nF
C6
GND
VCC_RAW
SV1
3V3
VNEG_CTRL
VPOS_CTRL
PWR_CTRL
P17
P15
P13
P11
P9
P7
P5
P3
P16
P14
P12
P10
P8
P6
P4
GND
100 nF
C9
IC1
VCCB
VCCA
DIR
OE
B1
B2
B3
B4
B5
B6
B7
B8
A1
A2
A3
A4
A5
A6
A7
A8
GND
GND
D3
D4
D5
D6
D7
GMODE
CKV
SPV
P3
P4
P5
P6
P7
P8
P9
P10
SN74LVC8T245
IC4
VCCA
VCCB
DIR
OE
CL
LE
OE
SPH
D0
D1
D2
SN74LVC8T245
DISP1
ED060SC7
VNEG
VPOS
VDD
VSS
XCL
XLE
XOE
XSTL
D0
D1
D2
D3
D4
D5
D6
D7
VCOM
SPI_SCL
SPI_SDI
VGG
MODE1
VEE
CKV
SPV
BORDER
SPI_NCS
SPI_SDO
mech.
3V3
VCOM
GVDD
GMODE
GVEE
CKV
GVEE
SPV