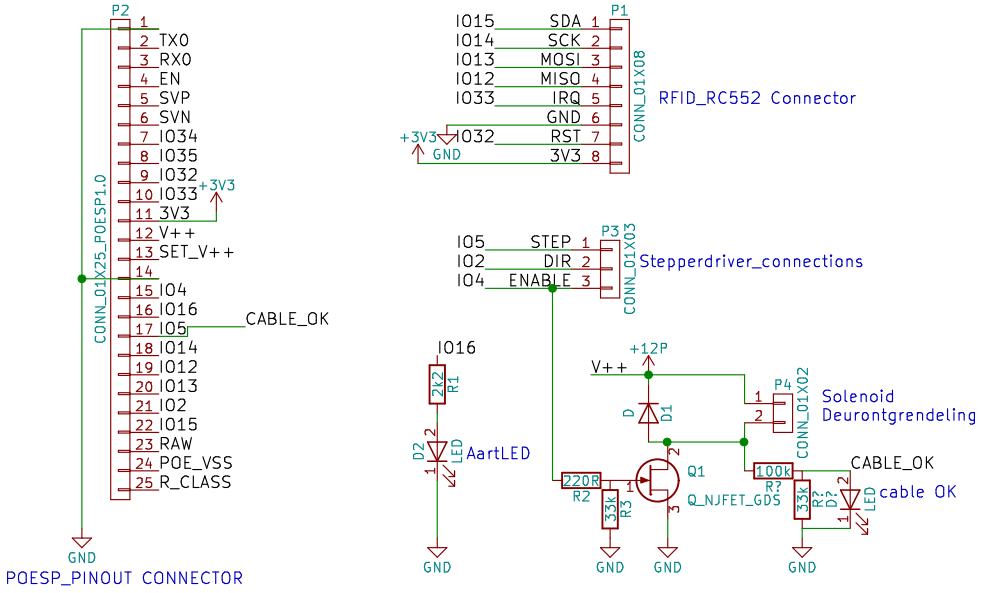

Sheet: /
File: Poesp_base.sch

Title:

Size: A4	Date:	Rev:
KiCad E.D.A. eeschema 4.0.5+dfsg1-4		Id: 1/1